DRAWING NUMBER/SHEET NUMBER
F2372

REMOVE ALL BURRS & SHARP EDGES

IF IN DOUBT ASK!

3RD ANGLE PROJECTION

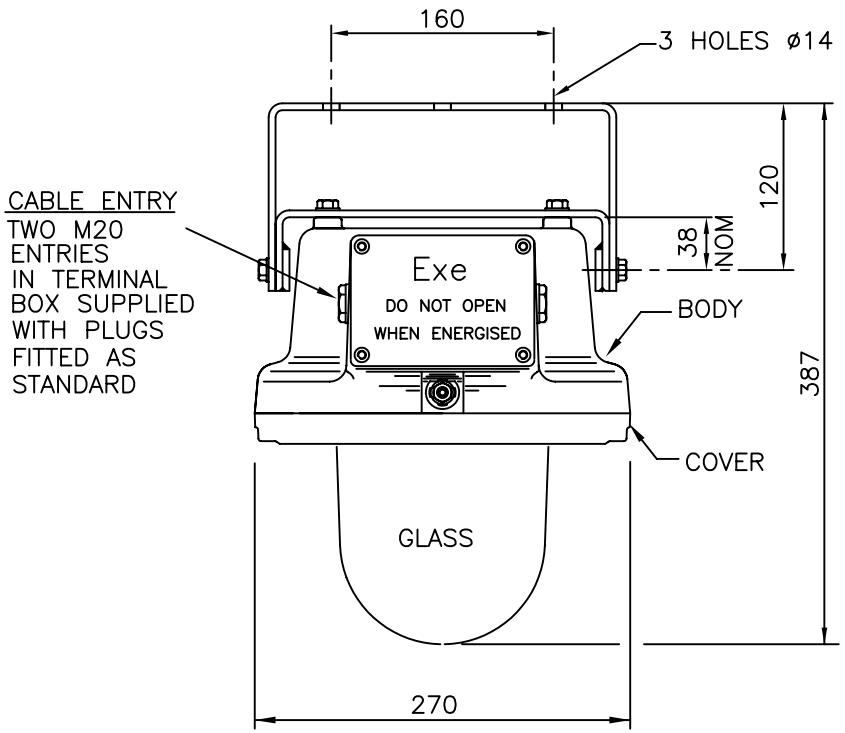

MODEL/PART No.	RATED SUPPLY	T CLASS	T amb	LAMPHOLDER	WEIGHT
216D/070/HS	230V 50Hz	T4	40°C	E27	10Kgs

TYPE OF PROTECTION....Ex de FLAMEPROOF & INCREASED SAFETY
AREA CLASSIFICATION.....ZONE 1 & 2, GAS GROUPS IIA & IIB
TO BS EN 60079–14
STANDARD.....BS EN 50014/18/19
CERTIFICATE.....ATEX TYPE EXAMINATION EECS BAS01ATEX2307
CODE EEx de IIC T4 Tamb(SEE TABLE)
INGRESS PROTECTION....IP66/67 TO BS EN60529 (IEC 529)
INCOMING CABLE UP TO 6mm^2 (3 CORE) FOR FOR LOOPING

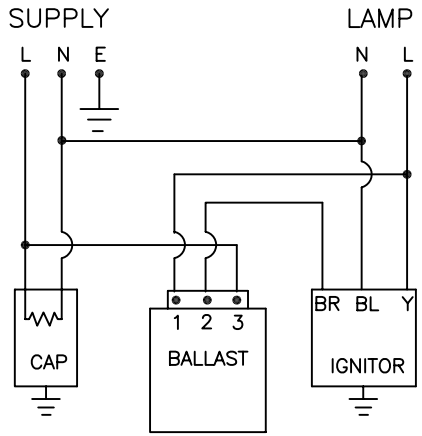

INTERNAL WIRING DIAGRAM

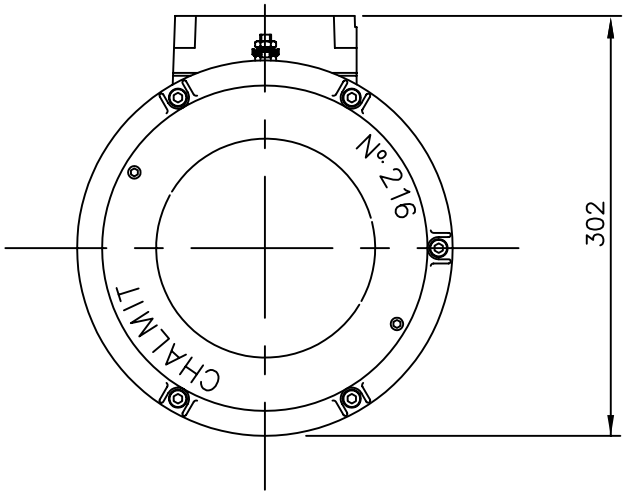

DCF No	MOD BY	CHANGE	ISSUE	DATE

Chalmit Lighting

Chalmit Lighting
388 Hillington Road,
Glasgow G52 4BL
Scotland
Tel:0141 882 5555 Fax:0141 883 3704

DRAWN	slee
CHECKED	
APPROVED	
DATE	31/05/2006

REF. DRGS.–

WITHOUT OUR PERMISSION THIS DRAWING, WHICH IS OUR COPYRIGHT, MAY NOT BE REPRODUCED OR MADE AVAILABLE TO THIRD PARTIES.
AUTHORISATION IS GIVEN TO ..... TO REPRODUCE THIS DRAWING FOR INTERNAL PURPOSES ONLY.

MATERIAL: Aluminium	TOLERANCE
FINISH: Self	SURFACE ROUGHNESS
DIMS. IN MM	SCALE –

TITLE
216D/070/HS
70 W HPS
STIRRUP MOUNTED

DRAWING NUMBER/SHEET NUMBER
F2372 1 OF 1