DRAWING NUMBER/SHEET NUMBER
F951

REMOVE ALL BURRS & SHARP EDGES

IF IN DOUBT ASK!

3RD ANGLE PROJECTION

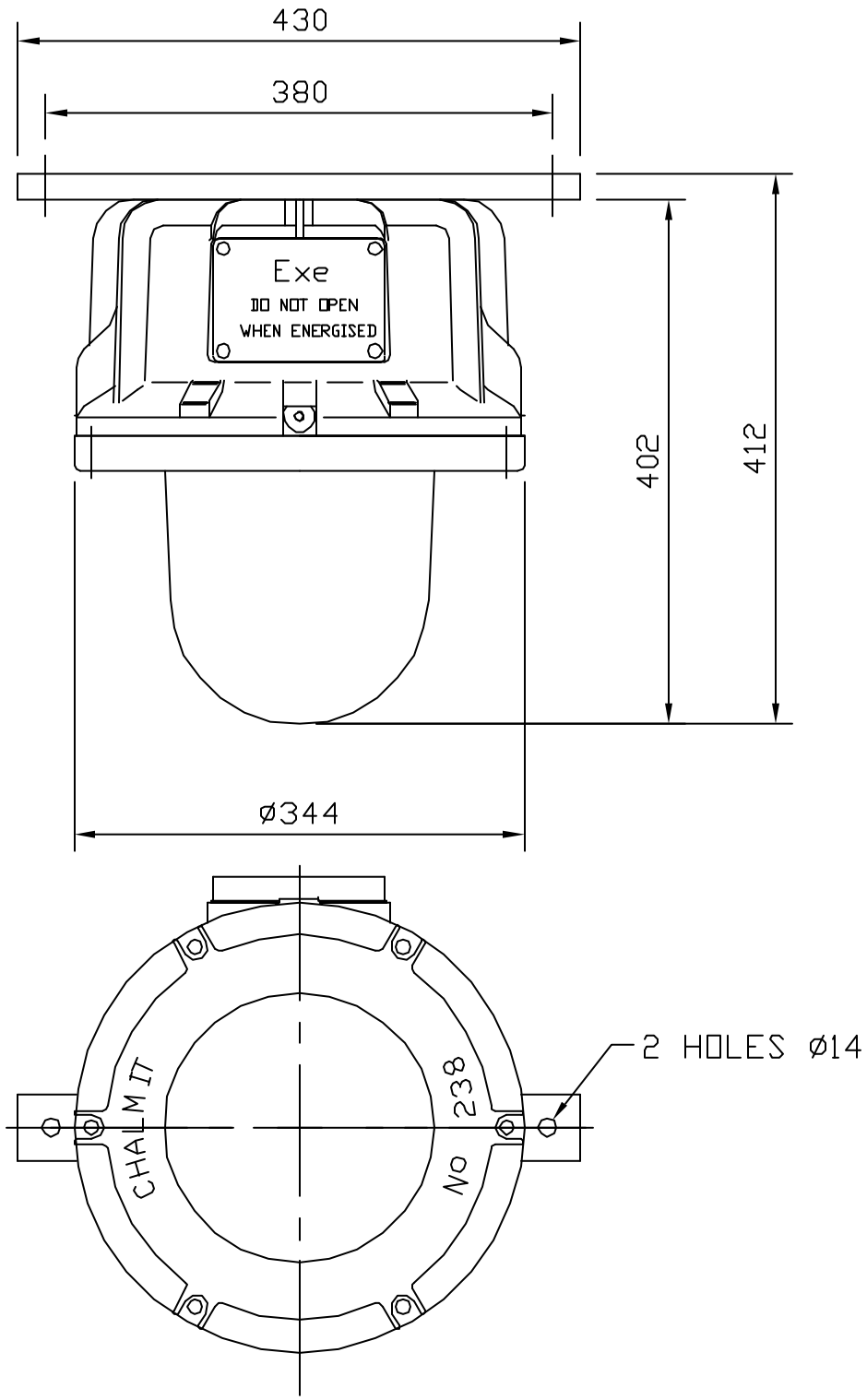

FLUSH MOUNTING VERSION

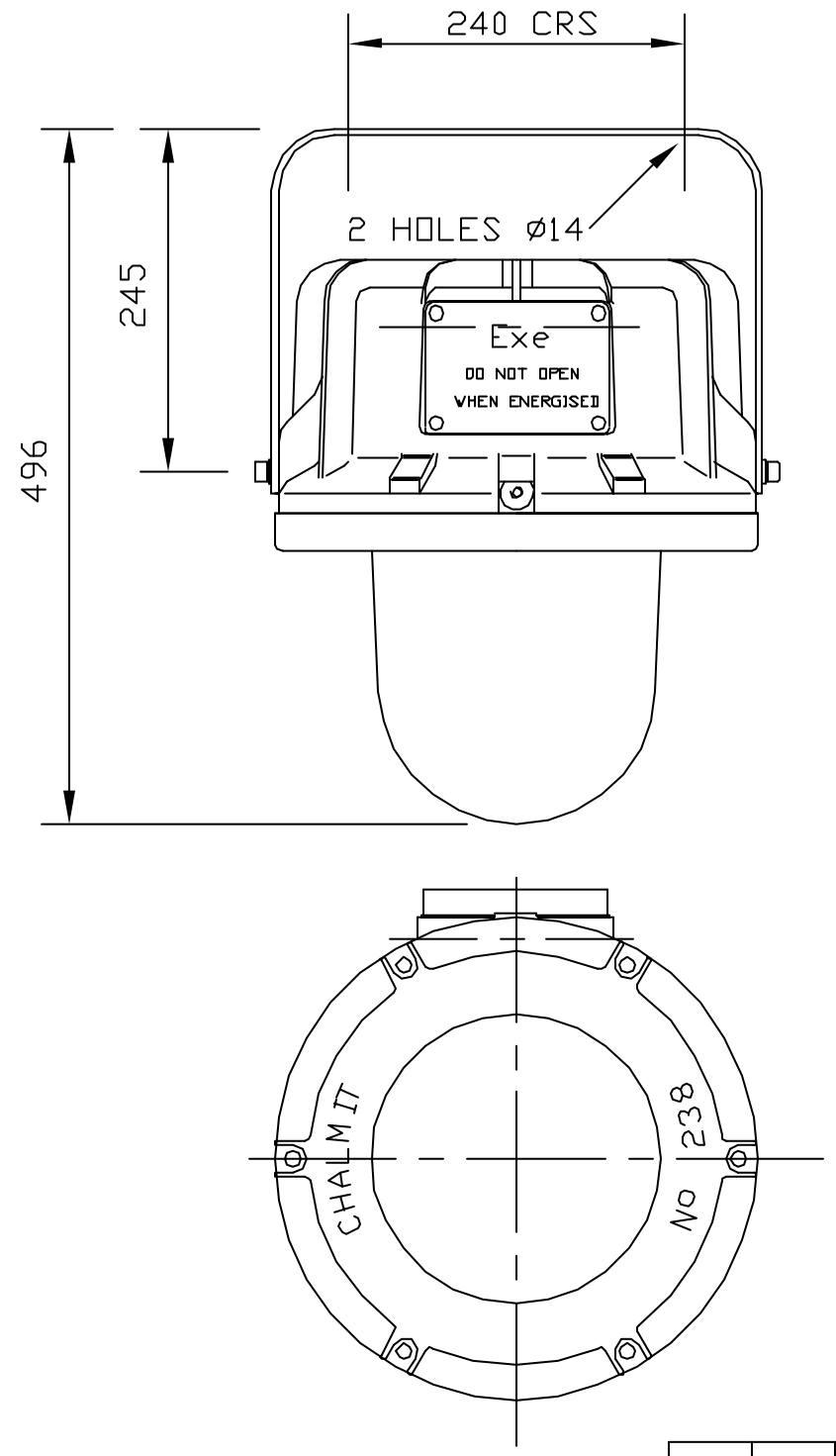

BRACKET MOUNTING VERSION

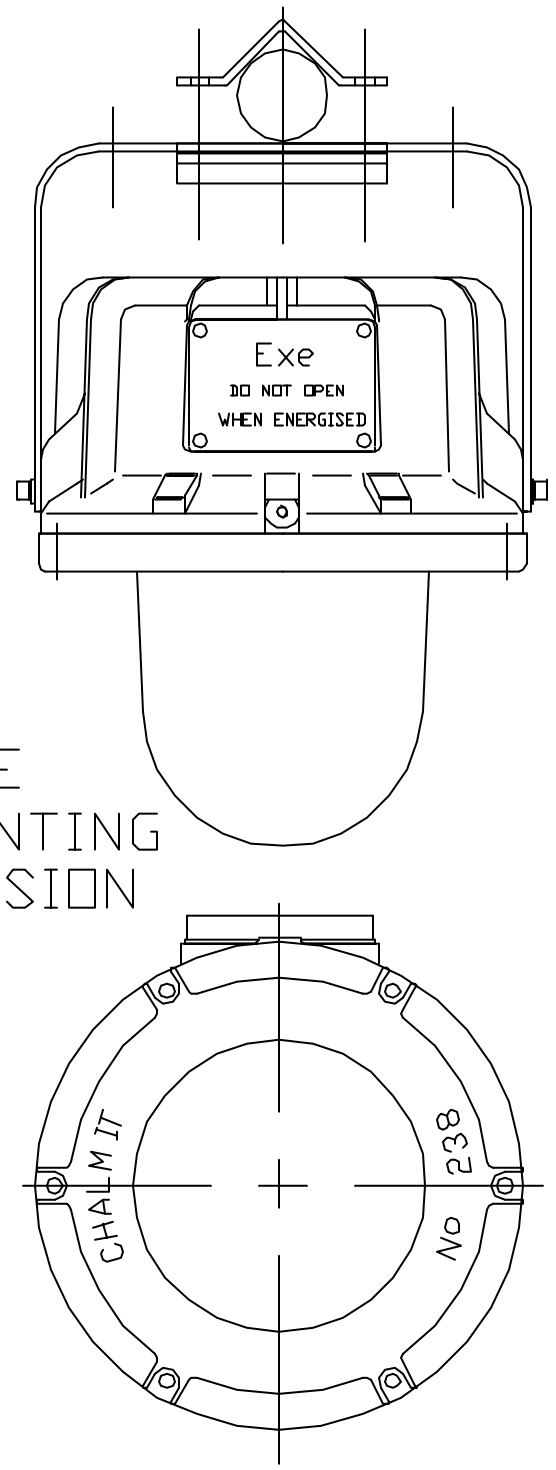

POLE MOUNTING VERSION

DCF No	MOD BY	CHANGE	ISSUE	DATE

Chalmit Lighting

Chalmit Lighting
388 Hillington Road,
Glasgow G52 4BL
Scotland
Tel:0141 882 5555 Fax:0141 883 3704

DRAWN	M.E.
CHECKED	Michael Easton
APPROVED	Michael Easton
DATE	09/01/2002
REF. DRGS.–	

WITHOUT OUR PERMISSION THIS DRAWING, WHICH IS OUR COPYRIGHT, MAY NOT BE REPRODUCED OR MADE AVAILABLE TO THIRD PARTIES.
AUTHORISATION IS GIVEN TO ..... TO REPRODUCE THIS DRAWING FOR INTERNAL PURPOSES ONLY.

MATERIAL

TOLERANCE

FINISH

SURFACE ROUGHNESS

DIMS. IN MM

SCALE –

TITLE
238 WELLGLASS
MOUNTING DETAILS

DRAWING NUMBER/SHEET NUMBER
F951 1 OF 1