DRAWING NUMBER/SHEET NUMBER
F843

REMOVE ALL BURRS & SHARP EDGES IF IN DOUBT ASK! 3RD ANGLE PROJECTION

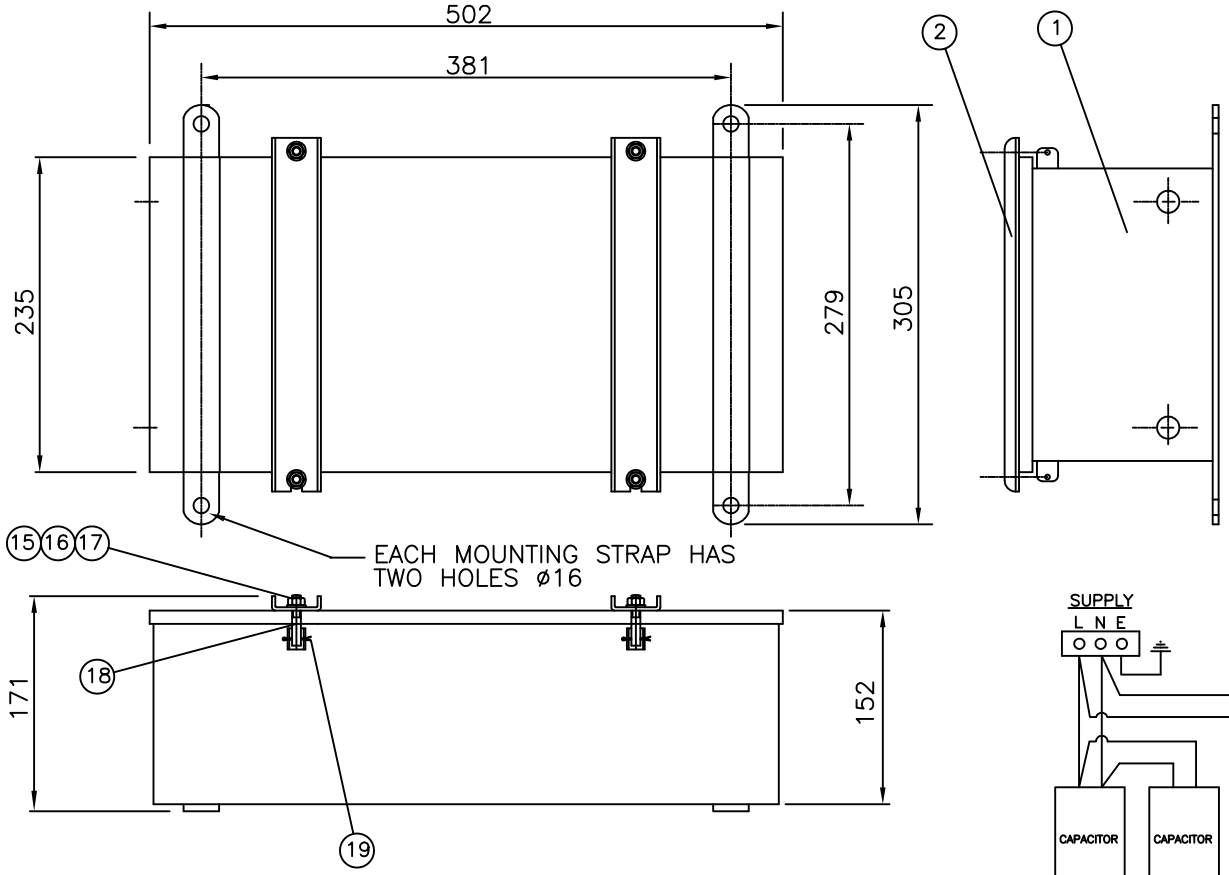

	ITEM No.	DESCRIPTION	No. OFF	CHALMIT PART CODE
	19	5mm x 25mm SPLIT PIN	4	H5004–0002
	18	M8x50 EYE BOLT	4	H5004–0001
	17	M8 HEX NUT	4	F3110–0800
	16	M8 PLAIN WASHER	4	F4110–0800
	15	M8 SPRING WASHER	4	F4210–0800
*	14	BK4 TERMINAL BLOCK	1	E0510–0002
*	13	AKZ4 TERMINALS	4	E0520–0004
*	12	AKE4 EARTH TERMINAL	2	E0520–0005
*	11	AP PARTITION	2	E0520–0006
*	10	EW15 END BRACKET	2	E0520–0007
*	9	Q2 JUMPER BARS	2	E0520–0008
*	8	TS15 ASSEMBLY RAIL	0.1MTR	E0520–0009
*	7	20AMP REDSPOT FUSEHOLDER	1	G6200–0004
*	6	NIT 16AMP CERAMIC FUSE	1	G6300–1500
*	5	M6x20 GEAR SLIDER	4	N5004–0206
*	4	GEAR TRAY PAINTED	1	N5005–0203
*	3	COVER GASKET	1	E0203–0002
	2	COVER ASSEMBLY	1	P5004–0005
	1	BOX ASSEMBLY	1	P5004–0002

* NOT SHOWN ON DRAWING

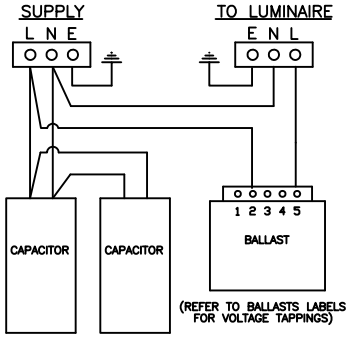

WIRING DIAGRAM
CABLE CAPACITY: 4mm² CABLE LOOPING

UNIT	501/250W	501/400W
BALLAST CHALMIT PART CODE	HDM 255 G1211–0250	HSM 405 G1211–0400
CAPACITOR CHALMIT PART CODE	2 x 15MFD G4800–1500	2 x 20MFD G4800–2000
WEIGHT	15Kg	17Kg
CABLE TEMP RATING	SEE INSTALLATION LEAFLET	
RATED SUPPLY	220–250V @ 50Hz	
T CLASS	T4 AT 40°C Tamb	
IP RATING	IP66/67	
WEIGHT	32Kg	

NOTE: THIS DRAWING MUST BE READ IN CONJUNCTION WITH THE APPROPRIATE INSTALLATON LEAFLET.

DCF No	MOD BY	CHANGE	ISSUE	DATE

WITHOUT OUR PERMISSION THIS DRAWING, WHICH IS OUR COPYRIGHT, MAY NOT BE REPRODUCED OR MADE AVAILABLE TO THIRD PARTIES.
AUTHORISATION IS GIVEN TO ..... TO REPRODUCE THIS DRAWING FOR INTERNAL PURPOSES ONLY.

MATERIAL | TOLERANCE
FINISH | SURFACE ROUGHNESS
DIMS. IN MM | SCALE –

Chalmit Lighting
Chalmit Lighting
388 Hillington Road,
Glasgow G52 4BL
Scotland
Tel:0141 882 5555 Fax:0141 883 3704

TITLE
501 G/BOX 250/400W
C/W FUSE; NO IGNITOR

DRAWING NUMBER/SHEET NUMBER
F843 1 OF 1

DRAWN	J.T.C.
CHECKED	J.T.C.
APPROVED	J.T.C.
DATE	06/06/2001

REF. DRGS.–