1	2	3	4	5	6	7	8

DRAWING NUMBER/SHEET NUMBER
F1964

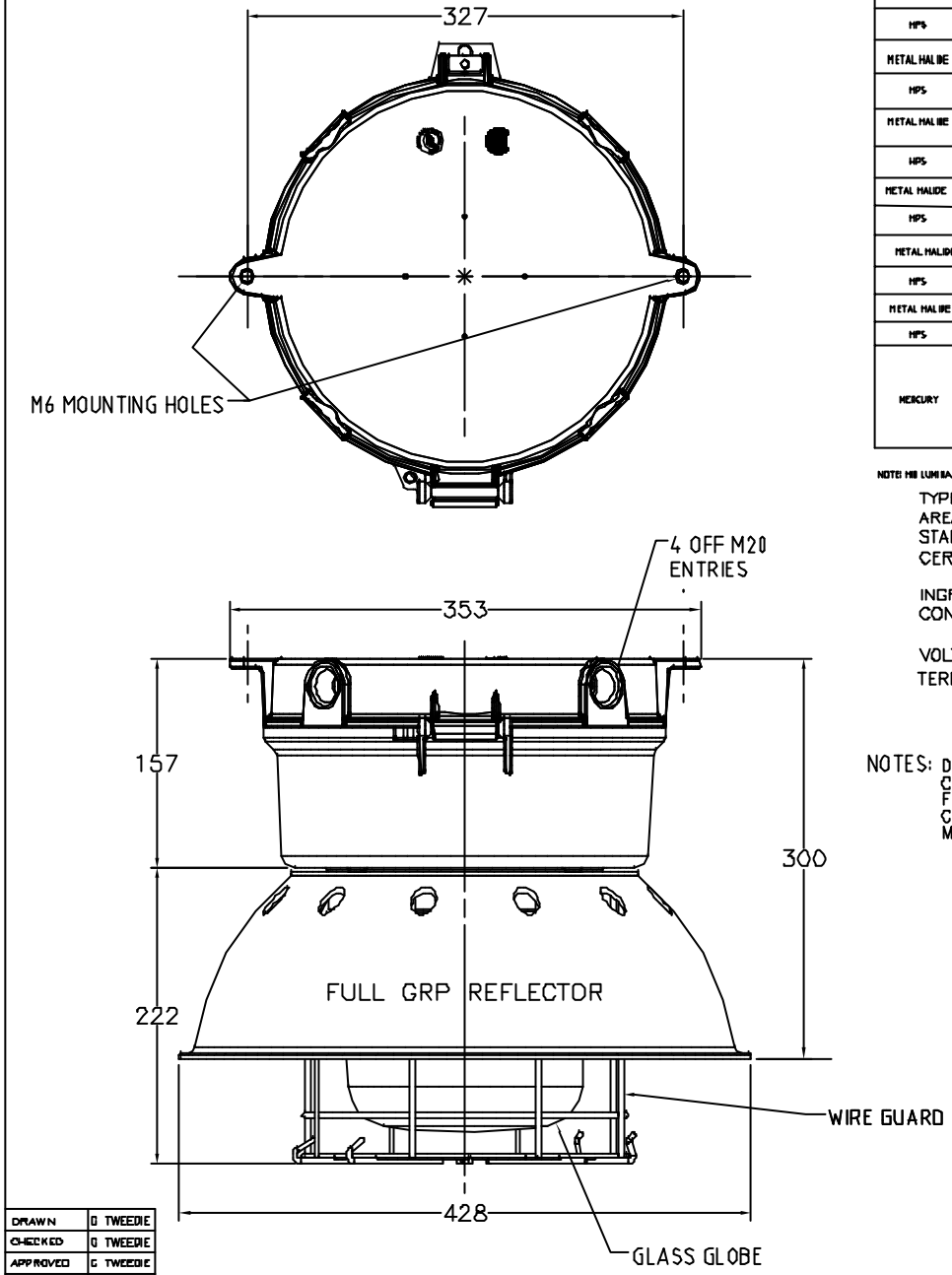

LAMP TYPE	DESIGNATION	WATTAGE RANGE	LAMP CAP	BALLAST DETAILS MAX T°C	BALLAST DETAILS MIN Tw °C	CAPACITOR OPTIONAL	Tamb °C	T RATING	No PFC Tamb °C	MAX SURFACE T°C	OPTIC TYPE	SPUN DIFFUSER MIN AMBIENT -45°C Tamb°C	T RATING	MAX SURFACE T°C	MINIMUM AMBIENT
HPS	SON	411	E40	60	140	2 x 21uF	35	T3	40°C	161°C	LONG GLOBE 8"	35 (40 No PFC)	T3	175°C	-45°C
METAL HALIDE	MBI														
HPS	SON	250	E40	60	140	2 x 15uF	50	T4		180°C		50			
METAL HALIDE	MBI														
HPS	SON	150	E40	60	140	20uF	55	T4		110°C	STANDARD GLOBE 8"	55			
METAL HALIDE	MBI														
HPS	SON	100	E40	60	130	15uF	55	T4							
METAL HALIDE	MBI														
HPS	SON	70	E27	60	130	10uF	55	T4			STANDARD GLOBE 5 3/4" STANDARD GLOBE 8"	N/A			
METAL HALIDE	MBI														
HPS	SON	50													
MERCURY	MBF	400	E40	15	140	15 + 10uF	35	T3		180°C	LONG GLOBE 8"	40	T3	180°C	
		250				20uF	50	T3		135°C					
		125	E40 E27	60	140	15uF	45	T3			STANDARD GLOBE 5 3/4" STANDARD GLOBE 8"	N/A			
		80	E27			8uF	45	T3							

NOTE: MB LUMINAIRES SUPPLY VOLTAGES RATED AT 210-230V 50/60Hz USING SUITABLE OR MULTI TAP CONTROL GEAR.

TYPE OF PROTECTION....EEx nA R (NON SPARKING) (RESTRICTED BREATHING ENCLOSURE)
AREA CLASSIFICATION.....ZONE 2 AREAS TO BS EN 60079-14
STANDARD.....BS EN 60079-15
CERTIFICATE.....ATEX TYPE EXAMINATION Baseefa ATEX0393X
CODE II 3G EEx nA R II T(SEE TABLE) Tamb(SEE TABLE)
INGRESS PROTECTION....IP65 TO BS EN60529 (IEC 529)
CONTROL GEAR.....INTERNAL COPPER/IRON, IGNITOR
INTERNAL PFC CAPACITOR
VOLTAGE RANGE :.....220-254V 50-60Hz
TERMINATION:.....LOOPING UP TO 6mm² 3-CORE CABLE AS STANDARD

NOTES: DRAWING ON LEFT SHOWS ECLIPSE II
CEILING MOUNTED VERSION
FITTED WITH FULL REFLECTOR AND WIRE GUARD.
CONTACT SALES FOR ALTERNATIVE
MOUNTING AND REFLECTOR/REFRACTOR OPTIONS

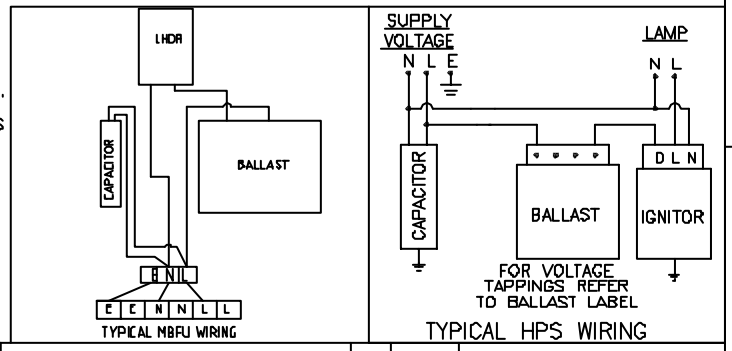

DCF No	MOD BY	CHANGE	ISSUE	DATE

DRAWN	D TWEEDIE
CHECKED	D TWEEDIE
APPROVED	G TWEEDIE
DATE	31/1/05

REF. DR98.-

WITHOUT OUR PERMISSION THIS DRAWING, WHICH IS OUR COPYRIGHT, MAY NOT BE REPRODUCED OR MADE AVAILABLE TO THIRD PARTIES.
AUTHORISATION IS GIVEN TO ..... TO REPRODUCE THIS DRAWING FOR INTERNAL PURPOSES ONLY.

MATERIAL: CAST
TOLERANCE:
FINISH: PAINTED
SURFACE ROUGHNESS:
DIMS. IN MM
SCALE - N.T.S

Chalmit Lighting

Chalmit Lighting
388 Hillington Road,
Glasgow G52 4BL
Scotland
Tel:0141 882 5555 Fax:0141 883 3704

TITLE
ECLIPSE II RANGE
CUSTOMER DRAWING

DRAWING NUMBER/SHEET NUMBER
F1964