DRAWING NUMBER/SHEET NUMBER
F1569

REMOVE ALL BURRS & SHARP EDGES IF IN DOUBT ASK! 3RD ANGLE PROJECTION

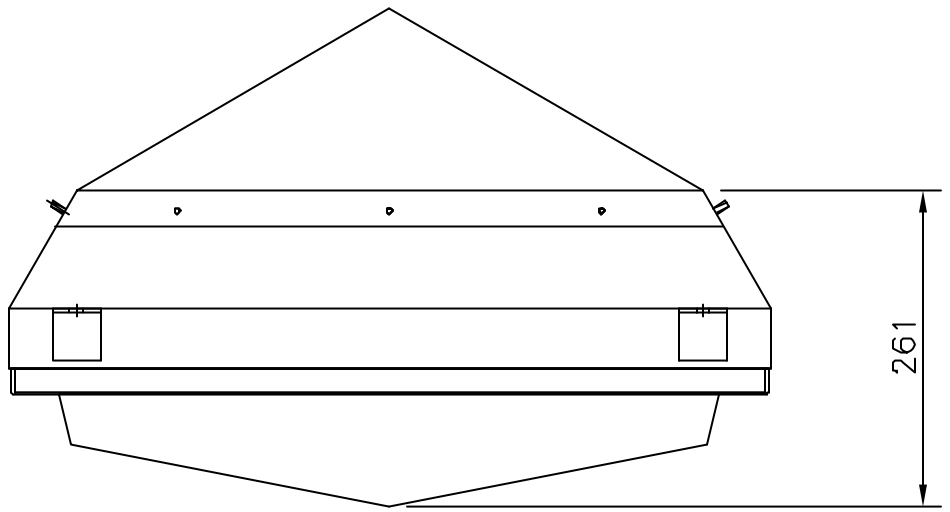

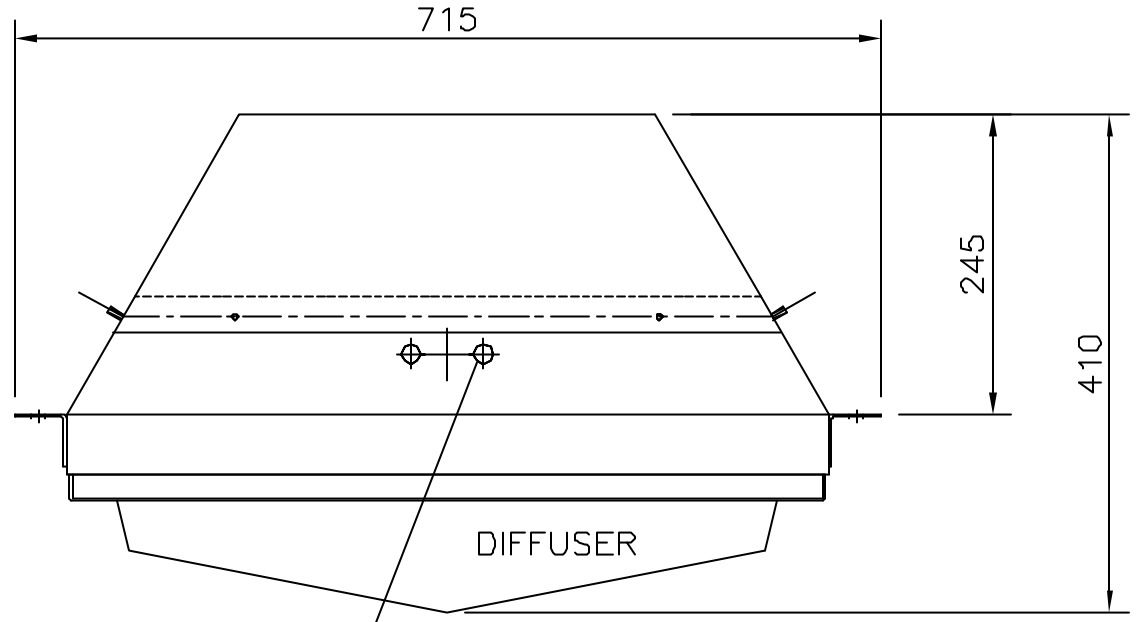

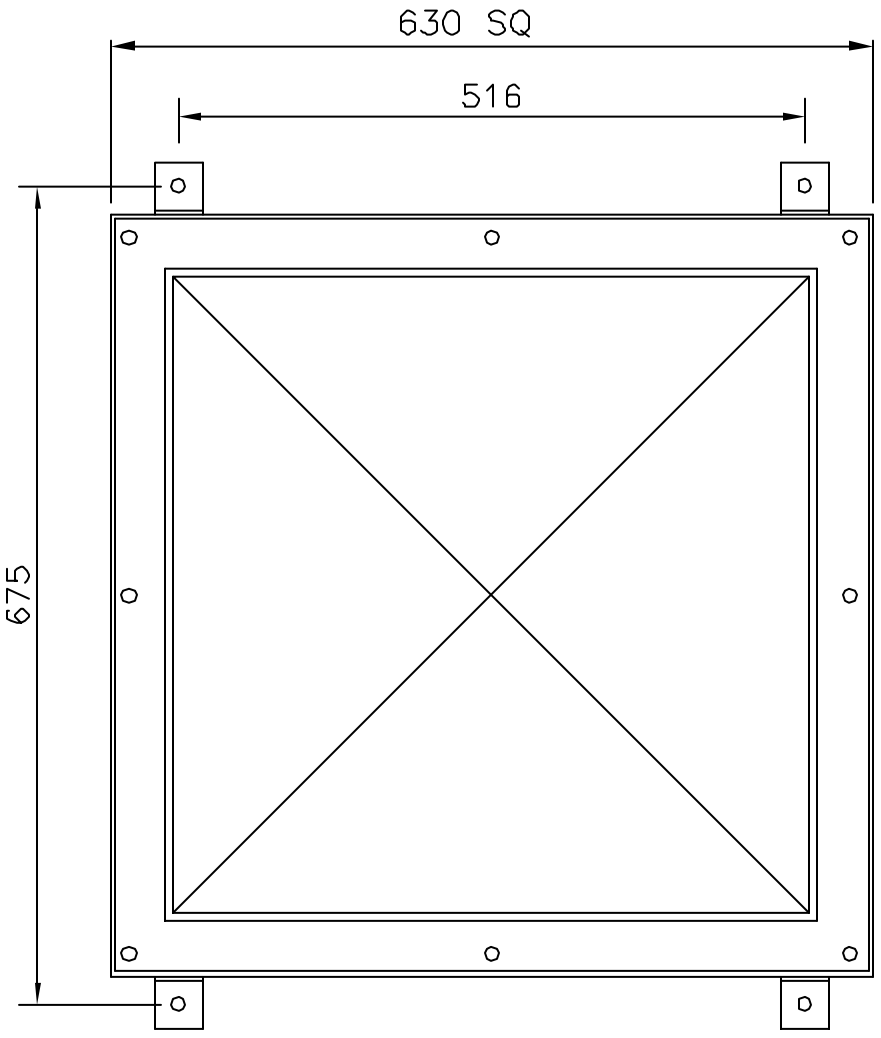

2 x M20 CABLE ENTRY
SUPPLIED WITH BLANKING PLUGS
ONE PERMANENT PLUG & ONE
TRAVELLING PLUG ONLY

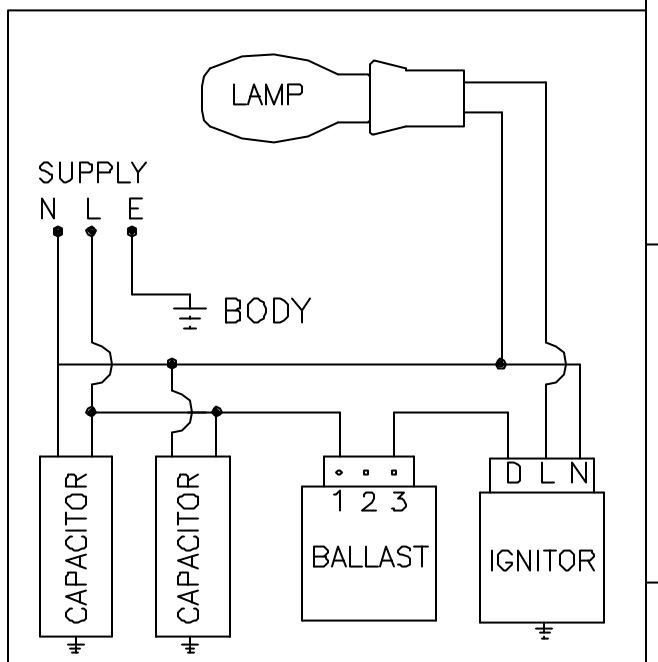

INTERNAL WIRING DIAGRAM
(REFER TO BALLAST LABEL
FOR VOLTAGE TAPPINGS)

INCOMING CABLE
3-CORE 4mm^2

CATALOGUE MODEL	LAMP	VOLTAGE	T CLASS	T Amb	EXTERNAL SURFACE TEMP.	IP RATING
PYMD150	SON/E	230-254V 50/60Hz	T4	50°C	130°C	IP65
PYMD250	SON/MBI		T4	45°C	110°C	IP65
PYMD400	SON/MBI		T4	30°C	115°C	IP65

OCF No	MOD BY	CHANGE	ISSUE	DATE

Chalmit Lighting

Chalmit Lighting
388 Hillington Road,
Glasgow G52 4BL
Scotland
Tel:0141 882 5555 Fax:0141 883 3704

DRAWN	jcampbell
CHECKED	J.T.C.
APPROVED	J.T.C.
DATE	16/02/2004

REF. DRGS.-

WITHOUT OUR PERMISSION THIS DRAWING, WHICH IS OUR COPYRIGHT, MAY NOT BE REPRODUCED OR MADE AVAILABLE TO THIRD PARTIES.
AUTHORISATION IS GIVEN TO ..... TO REPRODUCE THIS DRAWING FOR INTERNAL PURPOSES ONLY.

MATERIAL: Polyester Painted Zinc Coated
TOLERANCE: Steel N.T.S
FINISH: Polyester Painted
SURFACE ROUGHNESS:
DIMS. IN MM
SCALE -

TITLE: Pyramid Dust + Canopy Low-Medium Bay

DRAWING NUMBER/SHEET NUMBER: F1569 01□F01