1	2	3	4	5	6	7	8
DRAWING NUMBER/SHEET NUMBER F2709	REMOVE ALL BURRS & SHARP EDGES			IF IN DOUBT ASK!		3RD ANGLE PROJECTION	

NOTES

TYPE OF PROTECTION....Ex eqm (Increased Safety/Powder Filling/Encapsulation)
AREA CLASSIFICATION.....ZONE 1 & 21, GAS GROUPS IIA, IIB & IIC
TO BS EN 60079-10 & EN50281-3 &
INSTALLATION TO EN60079-14 &
INSTALLATION TO EN60079-14 & EN50281-1-2
STANDARD..... BS EN 50014/17/28 & EN 50281-1-1
CERTIFICATE .....ATEX TYPE EXAMINATION Baseefa04ATEX0220
CODING.....Ex II 2 G D EEx eqm II T4 Tamb 55°C
INGRESS PROTECTION....IP66/67 TO BS EN60529 (IEC 529)
INCOMING CABLE .....UP TO 6mm (4 CORE) FOR FOR LOOPING

NOTES:

a) BATTERY IS CONTAINED INSIDE THE BODY.
b) THRO' WIRING IS STANDARD ON ALL MODELS.

WIRING DIAGRAM

THE TERMINAL BLOCKS SHOWN ON THE WIRING DIAGRAM ALLOW FOR SINGLE ENTRY,LOOPING & THRO' WIRING FOR MAINS SUPPLY. THE REMOTE INHIBITING FACILITY CAN BE LOOPED IF REQUIRED.

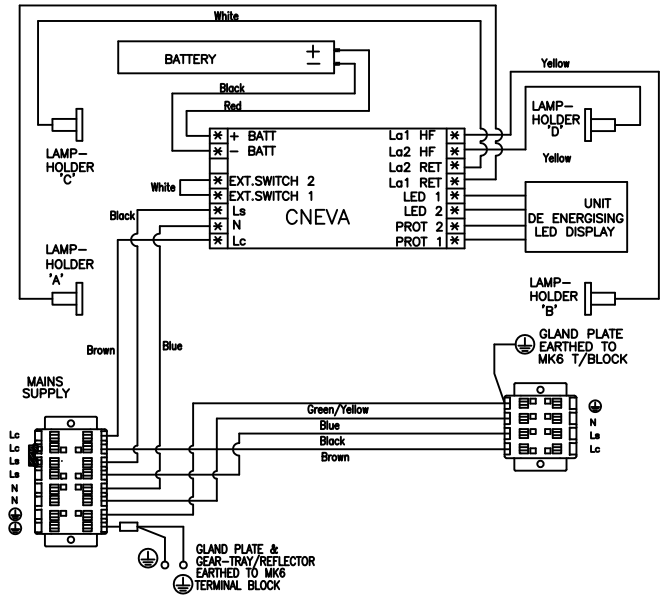

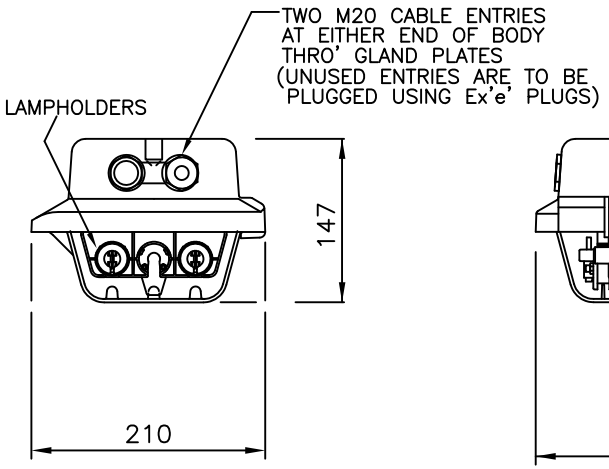

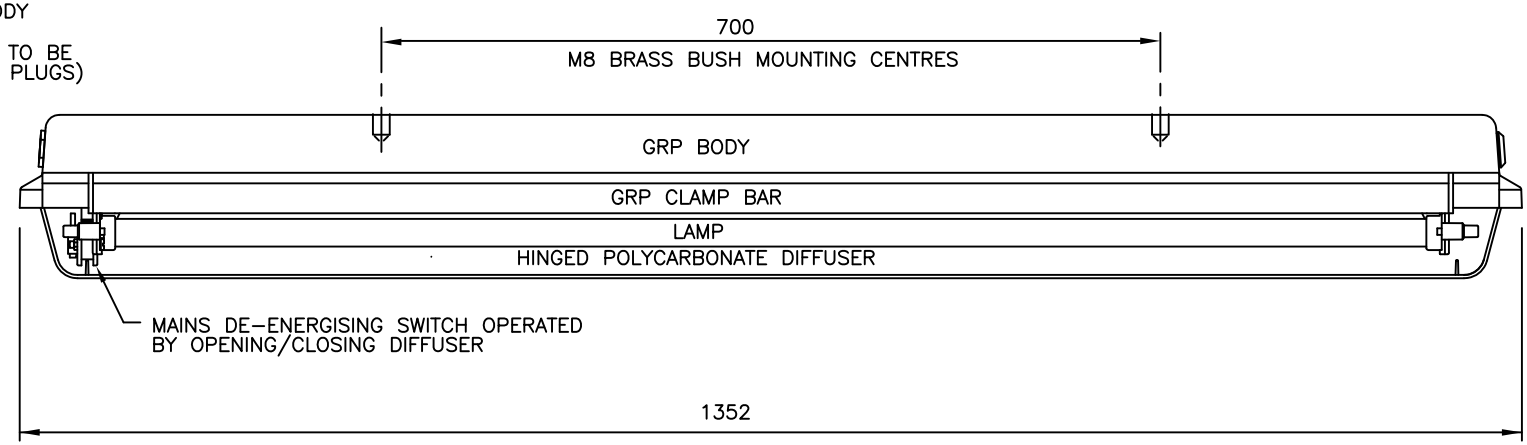

EMERGENCY OUTPUT:

STANDARD.....90mln-(4ah Battery) =25%
HEO .....90min-(7ah Battery) =45%
3H .....3 Hour-(7ah Battery) =25%

LUMINAIRE	WATTAGE	LAMP TYPE	WEIGHT
PRGE/236/BI/EM	2X36W	BI PIN	12.4Kg
PRGE/236/MO/EM	2X36W	MONO PIN	12.4Kg

DCF No	MOD BY	CHANGE	ISSUE	DATE

WITHOUT OUR PERMISSION THIS DRAWING, WHICH IS OUR COPYRIGHT, MAY NOT BE REPRODUCED OR MADE AVAILABLE TO THIRD PARTIES.
AUTHORISATION IS GIVEN TO ..... TO REPRODUCE THIS DRAWING FOR INTERNAL PURPOSES ONLY.

Chalmit Lighting
Chalmit Lighting
388 Hillington Road,
Glasgow G52 4BL
Scotland
Tel:0141 882 5555 Fax:0141 883 3704

DRAWN	Slee
CHECKED	slee
APPROVED	slee
DATE	30.01.08
REF. DRGS.-	

MATERIAL	Material
TOLERANCE	
FINISH	Finish
SURFACE ROUGHNESS	
DIMS. IN	MM
SCALE	-

TITLE: PROTECTA EMERGENCY GA 2X36W EMERGENCY FLUORESCENT SURFACE MOUNTED

DRAWING NUMBER/SHEET NUMBER: F2709 1 OF 1